Electrolux PROFESSIONAL

Salamanders
Electric Salamander, open on 3 sides - 400mm

ITEM #

MODEL #

NAME #

SIS #

AIA #



283013 (E0UUAEBOMCA)	Electric Salamander, open on 3 sides, 400 mm, accepts GN 2/3

Short Form Specification

Item No.

Constructed in AISI 304 stainless steel. Table top model can be hanged on the wall with wall brackets (optional). Open on 3 sides. Incoloy heating element placed in the upper deck, and can be tilted for easy cleaning. Upper deck is movable, sliding up and down along runners. Single cooking area managed by an energy regulator. Air vents along the upper side for evacuating heat and smoke. Extractable drip tray and chromium-plated steel grid for easy cleaning.

Main Features

- Single tilting incoloy armoured heating element.
- Cooking plate size: 400 x 350 mm accept GN 2/3.
- Heat control with energy regulator.
- Open 3 sides for rapid cooling and ease of use.
- Heating element can be tilted for easy cleaning under the moving deck.

Construction

- Made of AISI 304 stainless steel.
- Air vents along the upper side for evacuating heat and smoke.
- Removable stainless steel drip tray.
- Movable upper plate.
- Chromium-plated steel grid with a safety stop to avoid accidental fall.
- Table top unit can be wall mounted with dedicated optional accessory.
- 4 rubber feet.

Optional Accessories

• Wall mounted brackets kit for salamanders open on 3 sides	PNC 283035 ❑

APPROVAL:

Salamanders
Electric Salamander, open on 3 sides - 400mm

Front

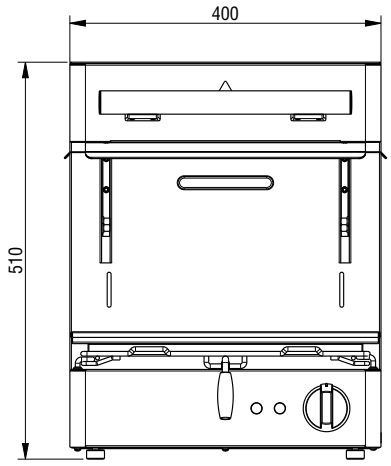

Side

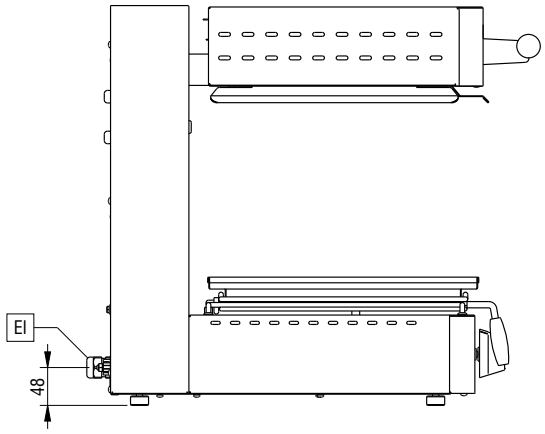

EI = Electrical inlet (power)

Top

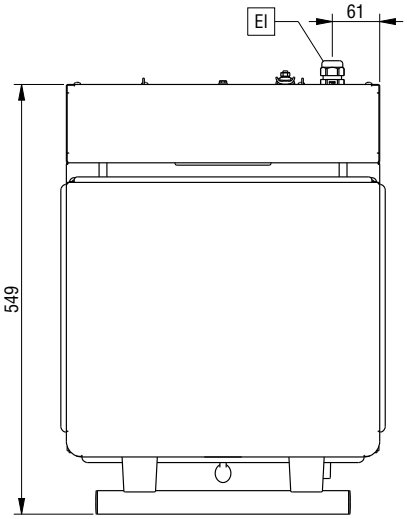

Electric

Supply voltage:	220-240 V/1 ph/50/60 Hz
Electrical power max.:	2 kW

Key Information:

External dimensions, Width:	400 mm
External dimensions, Depth:	549 mm
External dimensions, Height:	510 mm
Net weight:	35 kg
Height adjustment:	0/0 mm

The company reserves the right to make modifications to the products without prior notice. All information correct at time of printing.

2026.11.20